Unit - 3

Question:
Define automation and list the technologies included under automation.

Answer:

Automation is a technology concerned with the application of mechanical, electronic, and computer-based systems to operate and control systems.

Technologies included under automation:

- Automatic assembly machines
- Automation machine tools to process parts
- Industrial robots
- Automatic materials handling and storage system
- Automatic inspection system and quality control
- Feedback control and computer process control
- Computer system for planning, data collection, and decision-making to support manufacturing activities

Advantages of Automation:

- High production rates
- Decrease in lead time
- Reduction in storing capacity
- Elimination of human errors
- Decrease in labour cost

Disadvantages of Automation:

- Very high initial cost of raw material
- High maintenance cost
- Requirement of highly skilled labour
- Increased indirect costs for research, development, and programming

Question:
Explain the types of automation with their features and examples.

Answer:

Types of Automation:

1) Fixed Automation

- In fixed automation, the sequence of processing or assembly operations is fixed by the equipment configuration.
- The sequence of operations is simple and integrated into the equipment.
- It is difficult to automate changes in product design.
- Suitable for high-volume production.

- No new products are processed for a given sequence.

Features:

- High volume of production rates
- Relatively inflexible in product variety
- High initial investment for custom-engineered equipment
- High production rates

Examples:

- Automobile industries
- Machining transfer lines and automated assembly machines

2) Programmable Automation

- Equipment is designed to accommodate various product configurations.
- Sequence of operations can be changed by loading different control programs.
- Suitable for batch production of low and medium volumes.
- A new program is loaded for each batch with a different product configuration.
- Economical for small batch sizes.

Features:

- High investment in general-purpose equipment
- Lower production rates than fixed automation
- Flexibility in product configuration
- Suitable for batch production

Examples:

- Industrial robots
- NC machine tools

3) Flexible Automation

- Extension of programmable automation integrated with computer systems.
- Minimizes time loss during changeover between batches.
- Produces different products with no loss of time.
- High flexibility in interconnecting workstations with material handling and storage systems.

Features:

- High investment for custom-engineered systems
- Medium production rates
- High flexibility for product design variation
- Continuous production of variable mixtures of products

Example:

- Flexible Manufacturing Systems (FMS)

Question:
What are CNC machines?

Answer:

- CNC stands for Computer Numerical Control.
- It is an advanced form of the NC (Numerical Control) system.
- In CNC machines, a dedicated microcomputer is used as the machine control unit instead of a hard-wired controller.
- CNC technology evolved with rapid improvements in computer technology, especially after the advent of microprocessors in the 1970s.
- Modern CNC controllers feature:
    - High-speed operation
    - Large memory
    - Bus architectures
    - Improved servo systems
- CNC technology is widely used in the machine tool industry.
- CNC machines are used in:
    - Machining centers
    - Turning centers
    - Grinders
    - Lathes
    - Drilling machines

<u>Advantages of CNC Machines:</u>

- Avoid errors typically committed by humans using conventional machines.
- Programmability allows one person to operate multiple CNC machines, reducing employee count and costs.
- Provides a safer work environment as the operator is not exposed to the machining area.
- Can be upgraded to newer technologies by replacing the existing CNC control.
- Multiple CNC machines can be linked to a main computer, enabling program downloads to connected machines (Direct Numerical Control - DNC).

<u>Disadvantages of CNC Machines:</u>

- Requires thorough programming knowledge; skilled programmers are needed, increasing labor cost.
- Higher initial cost compared to conventional machine tools.
- Spare parts are more expensive than those for conventional machines.
- Needs air-conditioned environment or chiller unit, adding extra operational costs.

Question:
List and explain the elements of a CNC system.

Answer:
A CNC system consists of the following elements:

1) Input Device: Used to enter the part program into the CNC control or MCU.
Types include:

- **USB (Universal Serial Bus):** Transfers data via flash drives.

- **Serial Communication (RS-232):** Connects computer and CNC machine through a serial port.

- **Ethernet Communication:** Uses Ethernet card and cable to transfer data from computer to CNC machine.

- **Conventional Programming:** Built-in intelligent software allows step-by-step data entry by the operator.

2) MCU or Machine Control Unit:
It is the heart of the CNC system.
Main components:

- **Central Processing Unit (CPU):**
  - Control section retrieves data from memory and activates MCU components.
  - Arithmetic Logic Unit (ALU) performs arithmetic and logic operations.
  - Intermediate Access Memory temporarily holds data and programs.

- **CNC Memory:**
  - **Main Memory** which has:
    - ROM: Stores OS software and machine interface programs.
    - RAM: Stores part programs.
  - **Secondary Memory** which has:
    - Hard disks for storing large programs and supplying them to main memory when required.

- **Input/Output (I/O) Interface:** Connects operator, CNC components, and other computers.

- **Machine Tool Controls:** Controls position and speed of axes (X, Y, Z, A, B, C) and spindle RPM.

- **Sequence Controls for Auxiliary Functions:** Controls coolant, emergency stop, tool changing, etc.

3) Machine Tool:
Essential parts include:

- Machine table
- Machine slide
- Driving lead screw

- Ball screw
- Rigid and heavy machine structure
- Automatic tool changing system
- Spindle and spindle drive system
- Chip removal system

4) Driving System:
Comprises:

- Amplifier circuits
- Drive motors
- Ball lead screws

Types of motors used for it:

- DC Servo Motor
- AC Servo Motor
- Stepper Motor
- Linear Motor

5) Feedback Devices: Continuously update positional values and speed of axes.
Types:

- Positional feedback devices
- Velocity feedback devices

6) Display Unit: displays the current status of operation
Shows: Spindle RPM, Running part program, Feed rate, Machine slide position, Graphic simulation of tool paths, System warnings, Machine parameters, Logic diagram, Error messages and diagnostic data.

Unit - 3: Robotics

Robots:-

- ➢ Reprogrammable, multifunctional, manipulator device designed to move material, parts or tools and to perform a variety of tasks.
- ➢ Industrial robot: does tasks in industry. Like - loading, unloading, welding etc.

Why use robots?

- ➢ Works in hazardous conditions like nuclear reactors, military border, space etc.
- ➢ Consistently work. Great replicability and accuracy.
- ➢ Can be reprogrammed to do different tasks.
- ➢ Damaged parts can be replaced.
- ➢ Can use computer integrated manufacturing.

Basic terms of industrial robots:-

- ➢ Manipulator: arm-like mechanism designed to manipulate or move materials, parts or tools without direct human contact
- ➢ Joint: integrates two or more links to provide controlled relative movement between input link and the output link
- ➢ Link: rigid member that connects the joints. Can be an input link and an output link. Movement of the input link causes various motions of the output link.
- ➢ Degrees of freedom (d.o.f): describes a robot's freedom of motion in 3-D space.
- ➢ End effector or end-of-arm tool: device at the end of the robotic arm which is shaped like a hand or as a special tool depending upon the application.
- ➢ Base: support for the robot arm.

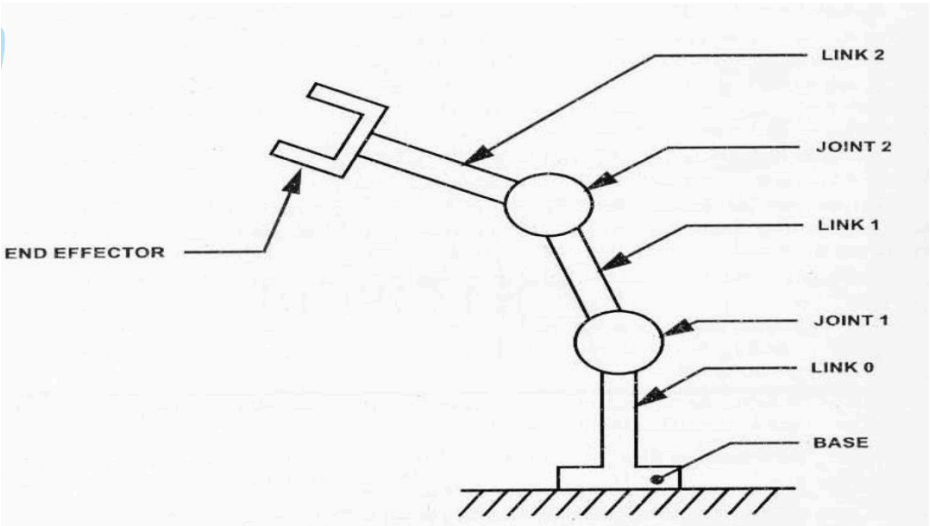

Elements of a Robotic System:-

- ➢ The Robot: consists of-

a. Manipulator which includes the base and the arm assembly.
b. End-of-the-arm tooling which is the end-effector.
c. Actuators which convert stored energy into movement. Common actuators include electric motors and linear actuators.
d. Transmission elements such as ball screws, pulleys, belts, gears, etc.

- ➢ Control System: generates the required signals to coordinate and execute robot movements. Comprises of:
    a. Controls such as Mechanical control, hydraulic control, pneumatic control, electrical or electronic control.
       Control techniques can be
        1. open-loop (non-servo) control
        2. feedback control
        3. feed forward control
        4. adaptive control
    b. Sensors to collect information about a certain measurement of the environment or internal components. Can be touch sensors or vision sensors.
    c. Equipment Interfaces

- ➢ Computer System: Used to program the robots according to the tasks required to be performed. The necessary software must be installed in the computer

- ➢ Power source: supplies electrical energy for the robot. Commonly, batteries are used. Lead-acid battery or Silver-Cadmium Battery.

Classification of Robot based on Robot configuration:

1. Polar Configuration / Spherical Configuration: Consists of 2 linear and 1 rotary joints-

- ➢ Sliding arm (L-joint) is actuated relative to the body
- ➢ Rotational base with a pivot can rotate about a horizontal axis (R joint)
- ➢ Vertical axis (T Joint).

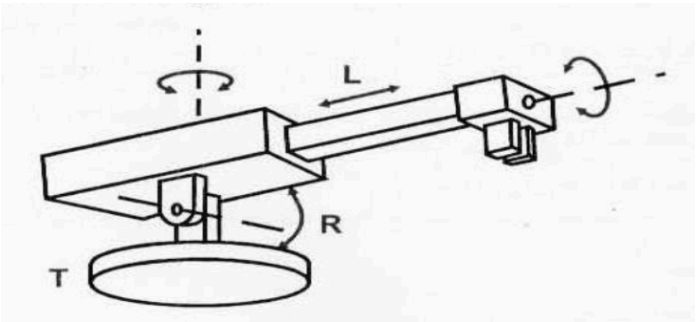

- Eg: Unimate 2000 series robot
- Advantage: Long reach capability realized in the horizontal position
- Disadvantage: vertical reach is low.
- Applications: Die casting, forging, injection moulding, dip coating, cleaning of parts, etc.

2. Cylindrical configuration: consists of a slide in the horizontal position and a column in the vertical position.

- Arm assembly moves up or down relative to the column using L-joint.
- Column is rotated about its axis using the T-joint.
- Radial movement of the arm is achieved using the O-joint

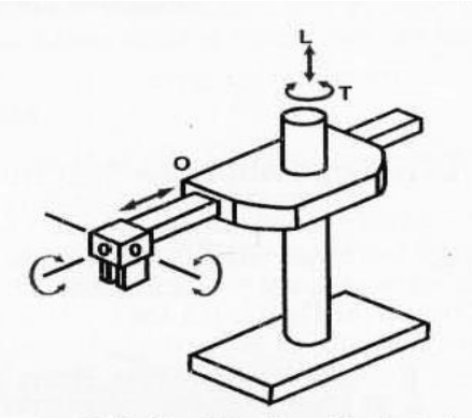

- Example: Model 1A Robot
- Advantages:
  1. Rigidity is increased and is quite robust.
  2. Has the capacity to carry high payloads.
- Disadvantages:
  1. Work volume is less.
  2. Occupies more floor space.
- Applications: Foundry and forging applications, investment casting, conveyor pallet transfers, machine loading and unloading

3. Cartesian Coordinate Robot / XYZ Robot / Cartesian Robot

- consists of three sliding joints along the X, Y and Z directions in three dimensional space.
- There are two orthogonal joints.
- Since movement can stop and start simultaneously along the X, Y and Z axes, the motion of the tool tip is smoother.
- Advantages:
  1. Allows for simpler controls.
  2. Possess a high degree of mechanical rigidity, accuracy and repeatability.
  3. can carry heavy loads and the weight lifting capacity does not vary within the work envelope.

- Disadvantages:
    1. Limited in their movement to a small and rectangular work space.
    2. Reduced flexibility.
- Applications: To perform pick and place tasks, material handling, loading/unloading and machining operations

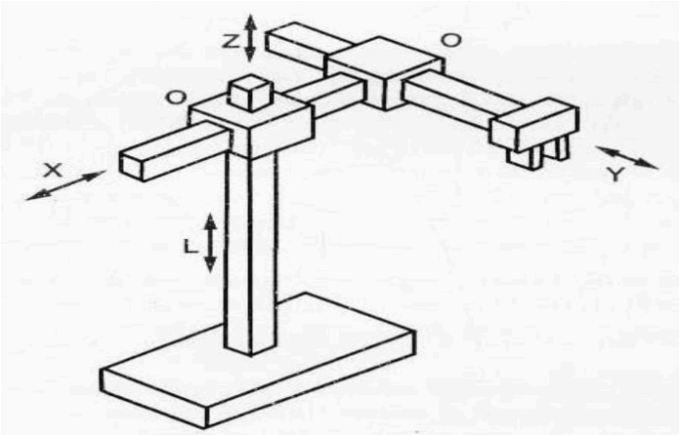

4. Jointed-Arm Configuration Robot: resembles the human arm

- Column swivels about a base (the column and the base forms a T-joint).
- Column top connects to the shoulder through a shoulder joint (R-joint).
- Shoulder connects to the elbow through an elbow joint (also an R-joint).
- Has the capability to be controlled at any adjustments in the work space.

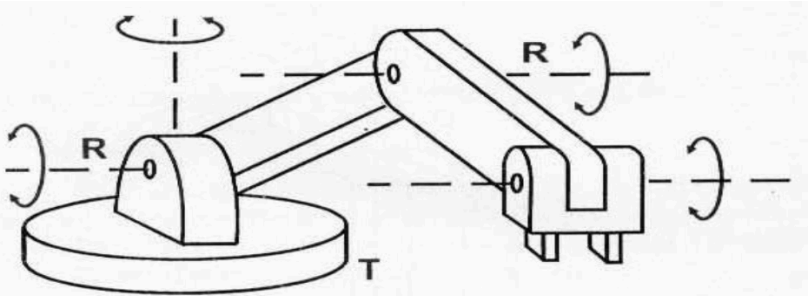

- Advantages:
    1. Work volume available is large.
    2. Operation is quick.
    3. Flexibility is increased.
- Disadvantages:
    1. Operating procedures are difficult.
    2. Expensive type of configuration.
    3. More number of components involved.
- Applications: Welding, spot welding and spray painting.

Material / Part Handling Applications of Robots:-

1. Transfer Materials from one location to another

- ➔ Pick-and-place application
- ➔ Palletizing application: robot stacks products or carton boxes onto a pallet at various positions to the required height. Example: KUKA model KR 40 PA that can stack pallets upto 1.6 metre height and has a payload carrying capacity of 40 kg. picks from the same location, but is programmed to place at different locations on the pallet in stacking row and column order. We use the teach-and-play method or program to compute the location of the carton box.
- ➔ Depalletizing application: robot picks parts from an orderly stacked pallet to another location. Example: FANUC Robotics M-410iB/140H can handle 140 kg
- ➔ Stacking application: robots are used to stack parts one upon another. After each placement, the vertical position is re-calculated and the new stacking height is determined. Example: FANUC M-2iA robot
- ➔ Insertion operation: Robots are used to insert parts into the compartments or spaces provided in a carton.

2. Machine Loading / Unloading : robot is used to move the work parts to or/and from the production machine.

- ➔ Machine loading: robot is used to load parts into the production machine, but the unloading is done by means other than a robot.
  Example: commonly applied in the Press working process.

- ➔ Machine unloading: robot is used to unload the finished parts that comes out of a production machine, but the loading of parts onto the production machine is done by means other than a robot.
  Example: Die casting and plastic modelling.

- ➔ Machine loading and unloading: In this operation, a robot is used to both load raw parts into the production machine and unload finished parts from the production machine.
  Example: Machining operation.

3. Industrial applications of robots used for machine loading/unloading:

- ➔ Die-casting: Robot is used to unload the parts from a die-casting machine. Other connected applications- carrying out cooling tasks or parting agent applications.
- ➔ Forging: Forging happens in one of the toughest environments due to the extreme heat, pollution and noise.
  Use of a robot immensely helps to face the environment of forging.
  Robot loads the red hot billet onto the die of the forging hammer, holds it during the blows and unloads to a safe place away from the hammer.

- ➔ Plastic injection moulding: Robot unloads parts from the injection moulding machine, cuts the runner and drops the runner to the scrap area.
- ➔ Sheet metal press operation (Press working): Robot loads a blank into the press, after press stamping operation is performed, the robot unloads the scrap and throws it into the scrap area. Stamped parts from the blank falls in the container placed at the back of the machine.
- ➔ Machining operations: Robot loads the raw blanks onto the machine tool and unloads the finished parts.
- ➔ Heat treating: Robot loads/unloads parts to/from a furnace.

Processing Operations Application of Robots:-

1. Spot Welding:
   - ➔ metal joining process where two metal parts are squeezed together between two electrodes and subjected to a large amount of current to form a joint
   - ➔ end-effector is the spot welding gun that applies the approximate pressure and current to the parts to be welded.
   - ➔ Robots have enough axes of motion to approach points in the work area at any angle. This was difficult to realize in a manned environment without robots.
   - ➔ Used largely in the automobile industry to weld automobile bodies

2. Arc Welding:
   - ➔ A metal joining process where metals are welded by using the heat generated by an electric arc.
   - ➔ Welding is continuous unlike spot welding.
   - ➔ When arc welding is manually carried out, the conditions are difficult for the operators since
     i) they require Personal Protective Equipment (PPE) to avoid UV rays
     ii) are under the danger of operating at high temperatures involving high amounts of heat
     iii) they must be accurate in following the welding path.
     These problems are now overcome with the use of arc welding robots.
   - ➔ Components of an arc welding cell include:
     I. Are welding robot: Most popular is jointed-arm type robot because it allows the welding torch to be manipulated.
     The torch and travel angles can be changed to make welds of good quality.
     Also welding can be done in areas that are difficult to reach.
     II. Power Source: Provides electric power required to do the arc welding operation.
     III. Welding torch: Carried by the robot as its end-effector tool to direct the welding electrode into the arc.

IV. <u>Wire feeder:</u> Used to add the filler material in robotic welding.
V. <u>Welding fixtures:</u> Hold the individual parts to be welded in proper alignment during welding.

3. Spray Coating: Process where parts are coated by a spray gun spraying the fluid onto the surface

- ➔ Fluid passes through the nozzle of the spray gun and is dispersed at high velocity to the surface to be coated. Eg- powder coating & spray painting.
- ➔ Human operators -> health hazards such as the paint or powder fumes / particles entering the operator's body and causing illness, flash fires resulting in burning in the painting booth pit, ear damage due to continued noise of the nozzle, etc. Hence if affordable, robots can be the right substitution to work in such environments.
- ➔ End effector: spray coating gun. The motion sequence must be smooth with continuous path control.
- ➔ Used in coating of the exterior and interior parts of a car, spray staining of wood furniture, applying stain to textiles, spraying porcelain coating on bathroom fixtures, etc.
- ➔ Benefits of spray coating:
  I. Protecting human operators from hazardous coating environments
  II. Consistency across coated parts is high
  III. Better productivity
  IV. Uniform coating on the coated surface
  V. Reduced paint wastage

4. Other Applications:

- ➔ <u>Grinding:</u>
  End effector:rotating spindle
  Grinding wheel is mounted in the spindle chuck. The robot moves its arms relative to the workpiece and grinds the material of the workpiece.
  Manual grinding has problems like exposure of operator to fast moving tiny ground particles leading to damage to the eyes and face, requirement of intensive training and grind mark patches.
  Use of robots can give us the perfect grinding finish with saving of time and absence of hazards.
- ➔ <u>Drilling and other machining processes:</u> The end-effector: rotating spindle and the cutting tool is mounted in the spindle chuck.
  Drilling a hole manually requires significant time and effort.
  Using robots in drilling helps to monitor drill speed, torque, countersinking, displacement and breaking of bits. The monitoring is done by sensors on the robots.

- ➔ Aerospace industry uses robotic drilling due to the precision and productivity benefits.
  only challenge is that the robot must handle the high cutting forces during machining.
  Robots are now used in other machining processes like routing, milling, etc.
  The end-effector here are spindles on which appropriate tools are mounted.
- ➔ Plasma Cutting: a process that uses high velocity ionized gas called plasma to heat and melt metals.
  The plasma later blows away the molten material mechanically to cut the workpiece.
  Results in high quality cuts at faster travel speeds.
  End Effector: plasma torch
- ➔ Laser Cutting: Uses a high power laser through optics to cut materials.
  End Effector: Laser tool
  Precision cutting with high repeatability and accuracy.
- ➔ Waterjet Cutting: Used to cut parts using a very high pressure stream of water. The nozzle ensures the high pressure of the water stream.
  End Effector: Nozzle
  Arm moves in the programmed paths to achieve high quality cutting.
  Waterjet robots are used to cut various materials
  Used in aerospace, automotive, textile, packaging and food industries.
- ➔ Other applications include wire brushing, deburring, fiberglass cutting, etc.

Advantages of Using Robots

1. Can be substituted for humans to work in hazardous work environments.
2. Produce greater quantities in a short span of time with consistency and accuracy that cannot be matched by humans.
3. Work at constant speeds without any break which is not possible by humans.
4. Can lift heavy loads without getting tired or injured.
5. Can work in tight spaces where human reach is not possible.
6. Can be re-programmed with changed tooling to take up a different task after the end of a batch or a production run. So, robots are better than fixed automation.
7. Accidents with humans at the workplace are avoided
8. Robots can be integrated to other computer systems to realize Computer Integrated Manufacturing (CIM).
9. Produces lesser or no defective parts so saves time of rework and money to the organization.

Disadvantages of Robots

1. Huge investment to introduce robots in workplaces.
2. Since robot parts are made very precisely, their replacement is very difficult and their maintenance costs a lot of money.

3. Highly skilled technical engineers and programmers are required to program robots and their systems as well as avoid future problems. This is costly.
4. If their artificial intelligence is advanced, robots may not respond properly in an emergency or when variance occurs.